LADIES CREWNECK (SHORT SLEEVE)
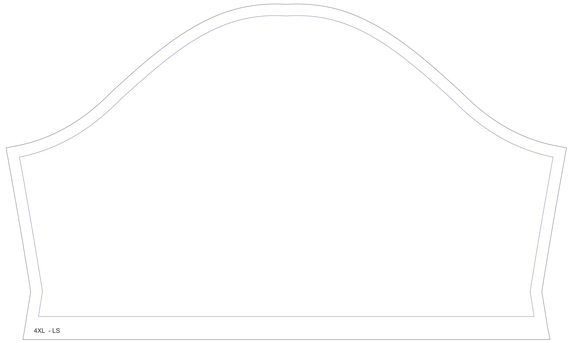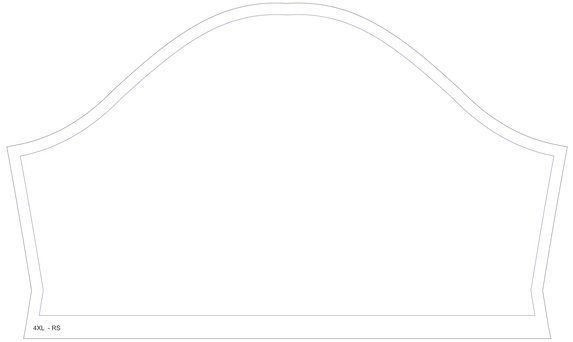
4XL